EASY COOPS

STEP BY STEP

Free 6'x10' Chicken Coop Plan

Up to 6 chickens

Compare Free vs. Premium plan

	Free plan	Premium edition
Pages	7	14
Illustrations for Each Step	✓	✓
Print Ready	✓	✓
Step By Step Instructions	✓	✓
Full Materials and Cuttings List	✗	✓
Additional Illustrations	✗	✓
Additional Blueprints	✗	✓
Tools List	✗	✓
Fastening Elements List	✗	✓
Technical Support	✗	✓

TRY PREMIUM

6' x 10' Chicken Run Shopping list

Lumber (4 x 4)	Pcs	4	8'
Lumber (2 x 6)	Pcs	7	8'
Lumber (2 x 4)	Pcs	6	10'
Lumber (2 x 4)	Pcs	19	8'
Lumber (2 x 4)	Pcs	8	6'
Lumber (1 x 6)	Pcs	4	10'

Size & Dimensions

Front

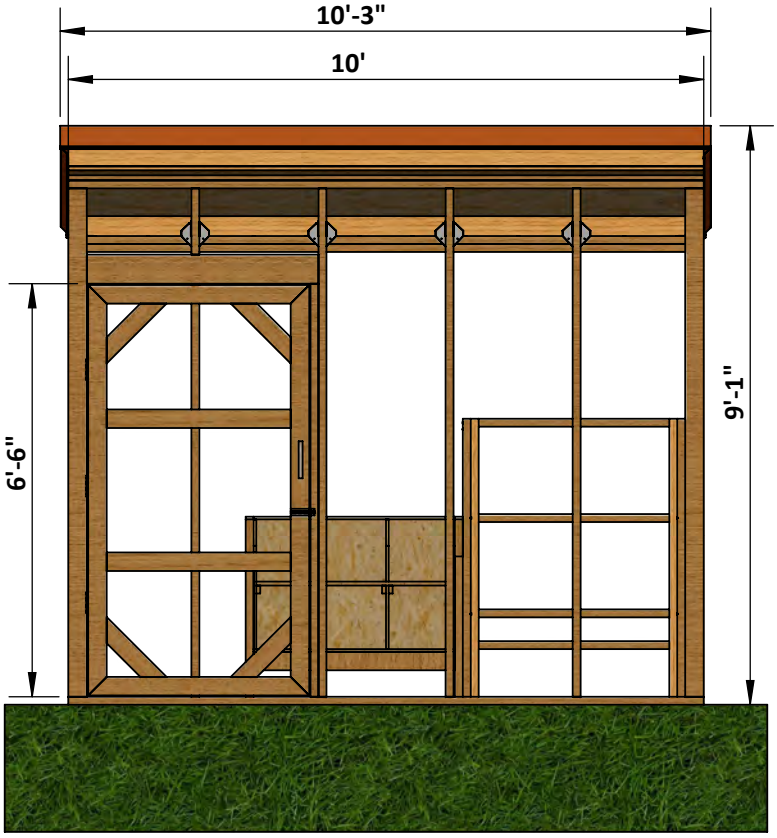

Right

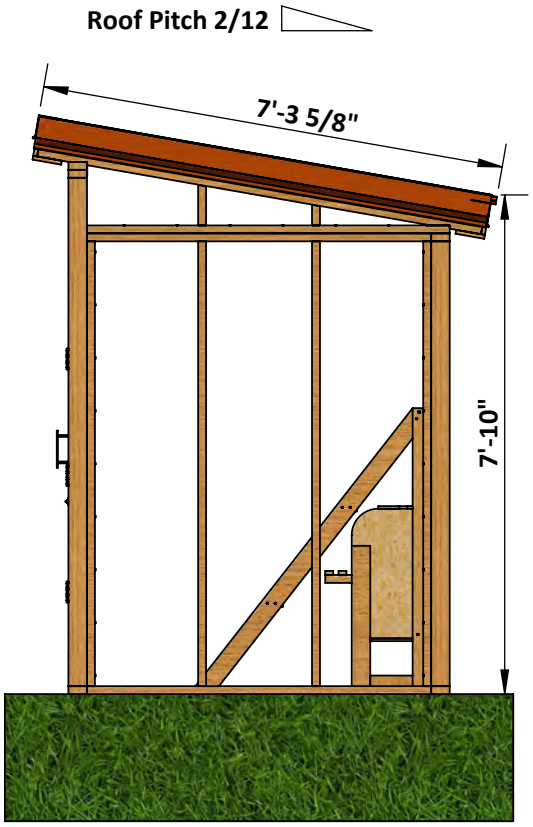

Back

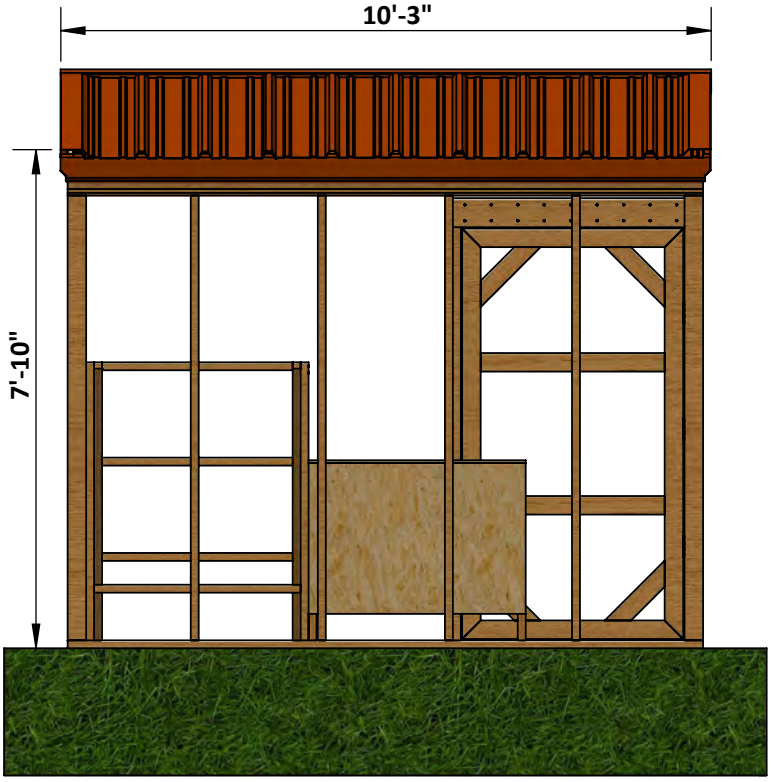

Left

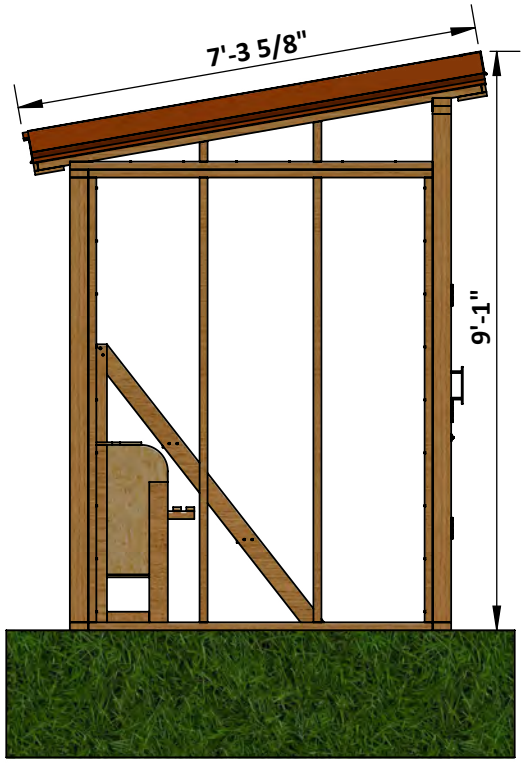

Model View

STEP 1

Back Wall Frame Assembly

1.1 Assemble the frame using 2x4 and 4x4 lumber.

1.2 Secure the beams and studs with 3" wood screws.

Pos	Description	Material	Dimension	Qty
A	Studs	4x4	7'	2
B	Top/Bottom Beam	2x4	10'	2
C	Studs	2x4	7'	4

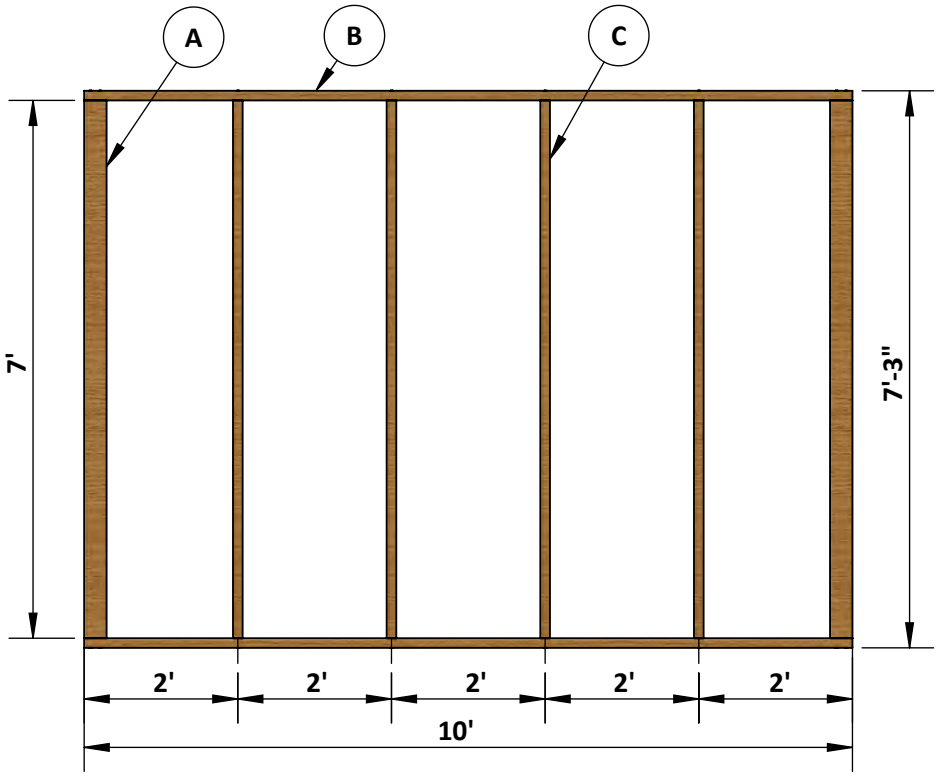

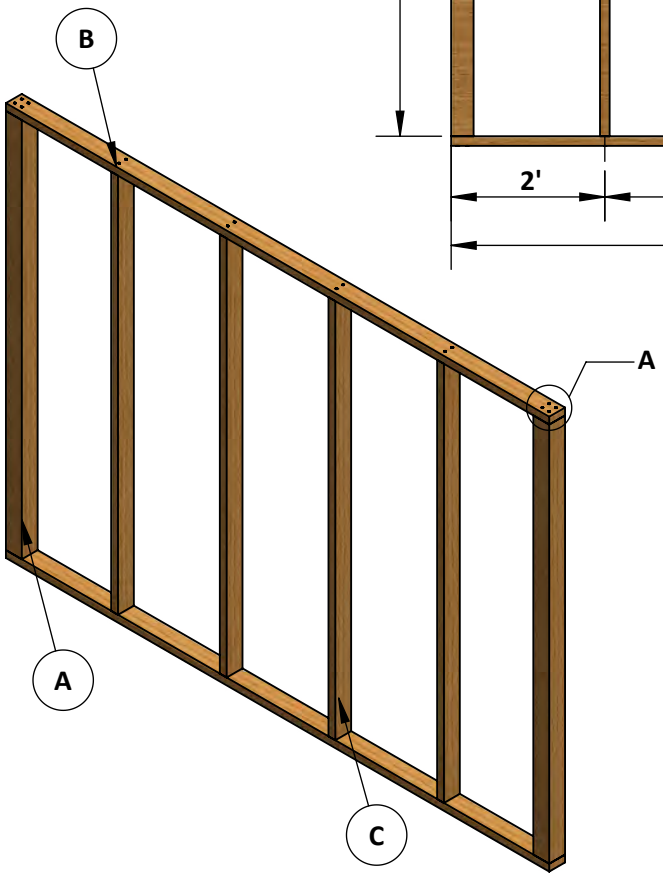

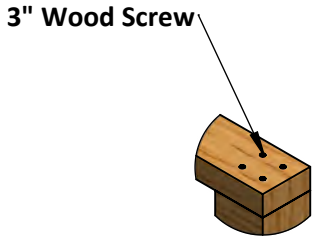

DETAIL A
SCALE 1 : 10

STEP 2

Side Wall Frame (Left & Right) Assembly

2.1 Assemble the frame using 2x4 lumber attached in Left and Right side.

2.2 Secure the beams and studs with 3" wood screws.

Pos	Description	Material	Dimension	Qty
A	Studs	2x4	7'	8
B	Top/Bottom Beam	2x4	5'-5"	4

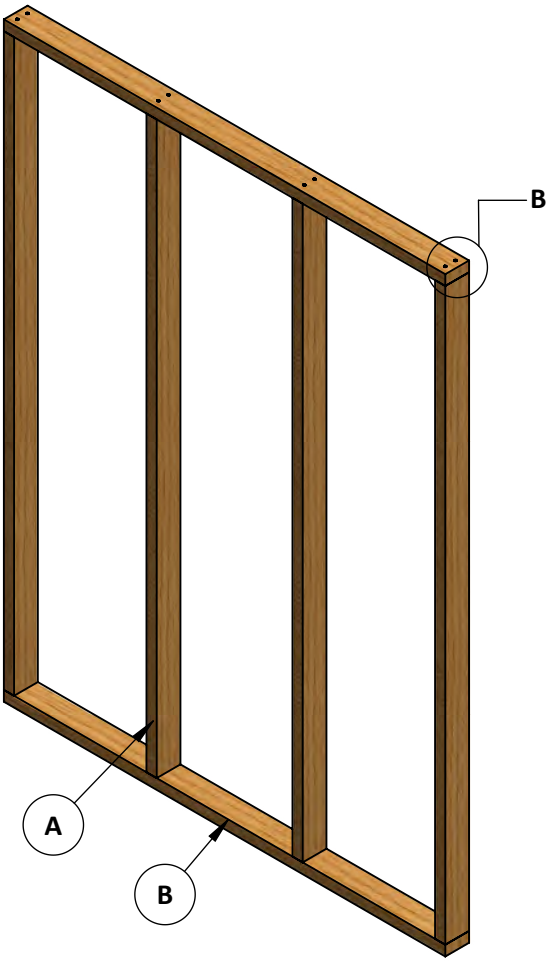

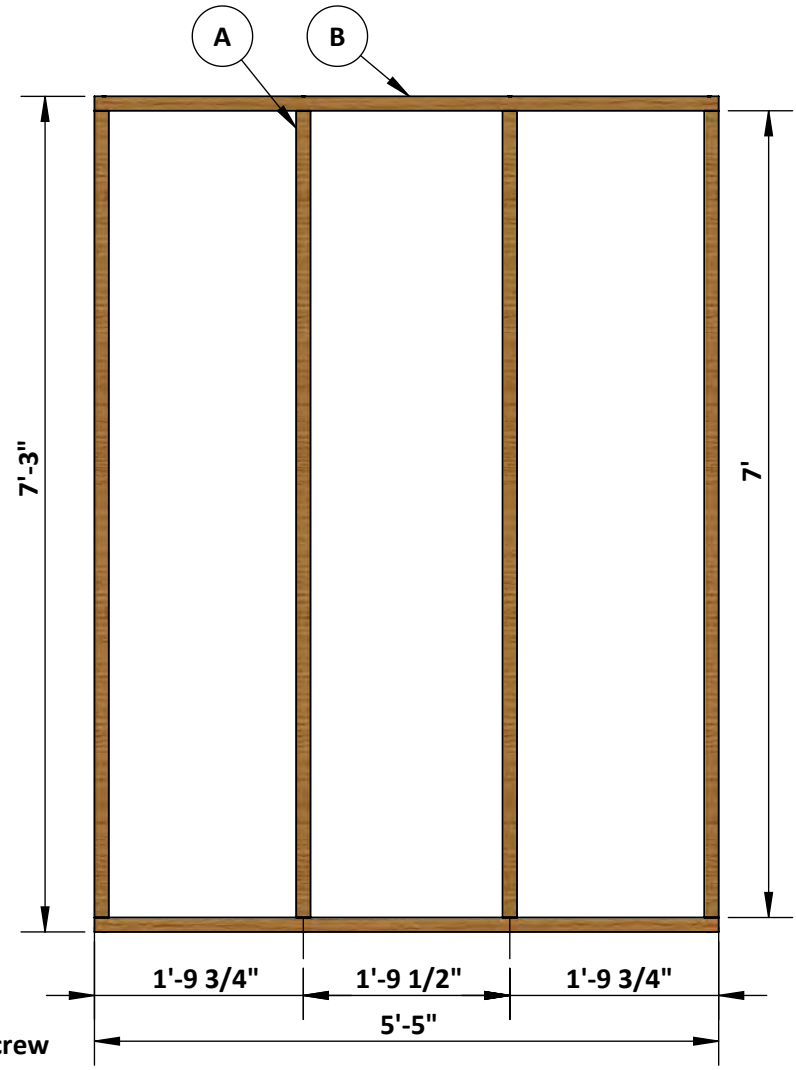

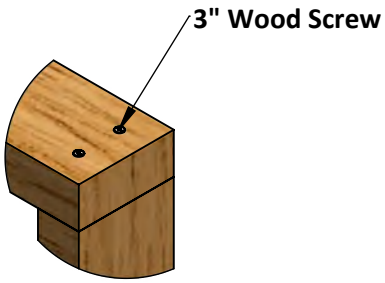

DETAIL B

SCALE 1 : 5

STEP 3

Front Wall Frame Assembly

3.1 Assemble the frame using 2x4, 2x6 and 4x4 lumber.

3.2 Secure the beams,Door Header and studs with 3" and 5" wood screws.

Pos	Description	Material	Dimension	Qty
A	Studs	4x4	8'	2
B	Top/Bottom Beams	2x4	10'	2
C	Studs	2x4	8'	3
D	Door Header	2x6	3'-7 3/4"	2
E	Door Header	OSB 1/2"	5 1/2" x 3'-7 3/4"	1
F	Stud	2x4	1'-1/2"	1
G	Stud	2x4	6'-6"	1

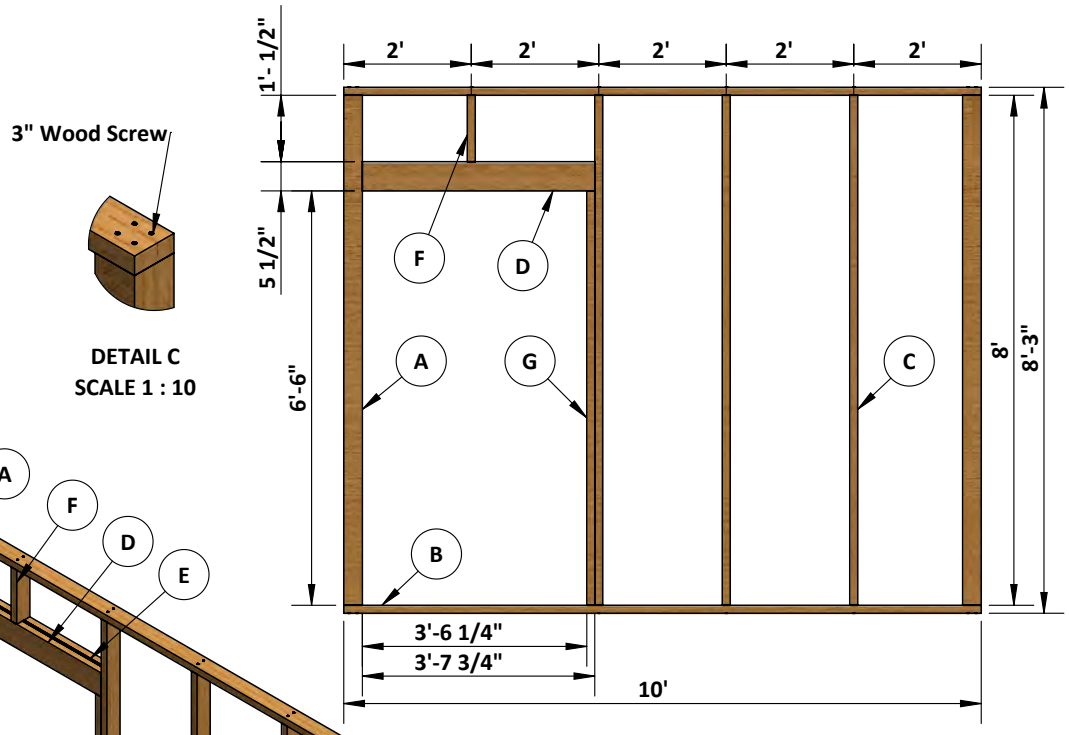

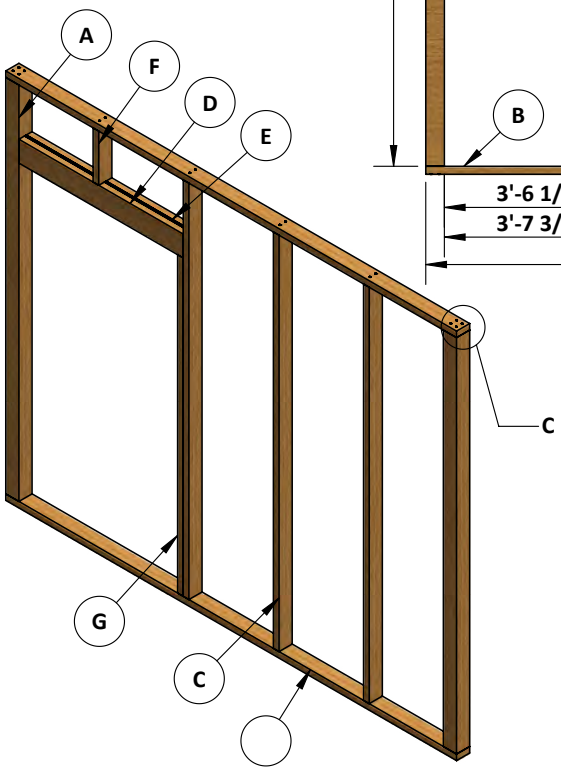

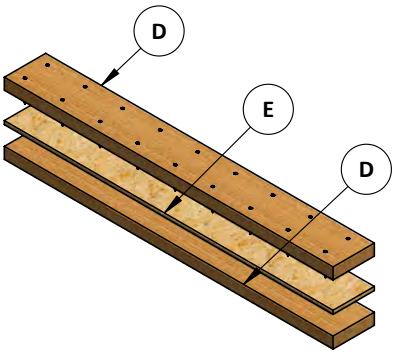

STEP 4

Fascias Assembly

4.1 Assemble the fascias using 1x6 lumber.

4.2 Secure the fascias with 2" wood screws.

Pos	Description	Material	Dimension	Qty
A	Fascias	1x6	10'	4

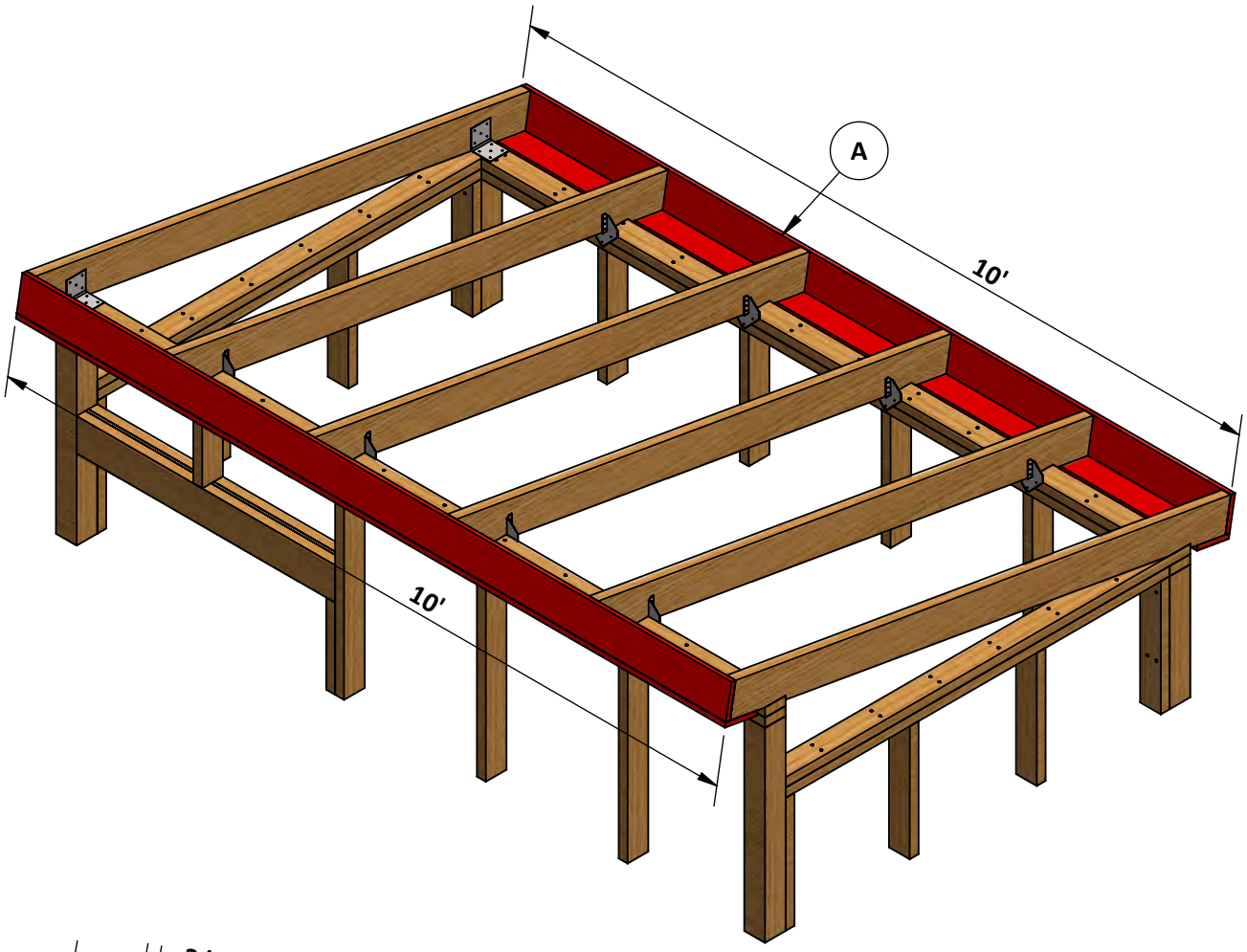

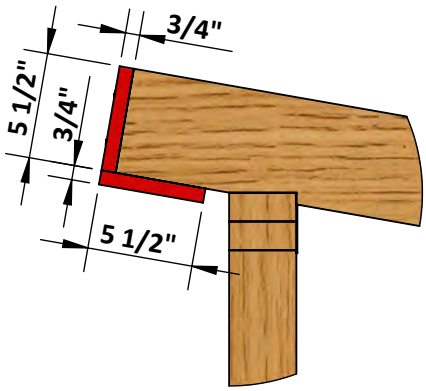

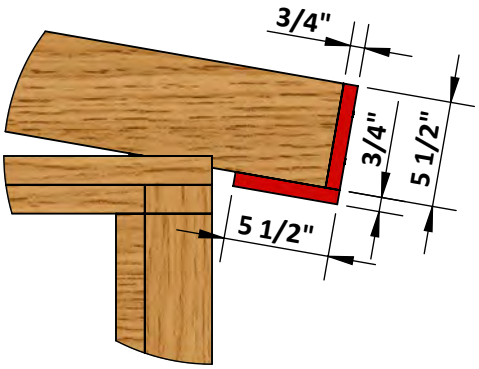

STEP 5

Metal Roof Assembly

5.1 Assemble the PBR panels in 9’-9” x 7’-3 5/8” roof area.

5.2 Assemble the eave flashing EF-3 according to node 1 below.

5.3 Assemble the gable rake GR-6 according to node 2 below.

5.4 Assemble the high side eave HS-2 according to node 3 below.

5.5 Secure the PBR panels, eave flashing, gable rake and high side eave with #9x1-1/2 screw and #12x1-1/2 screw.

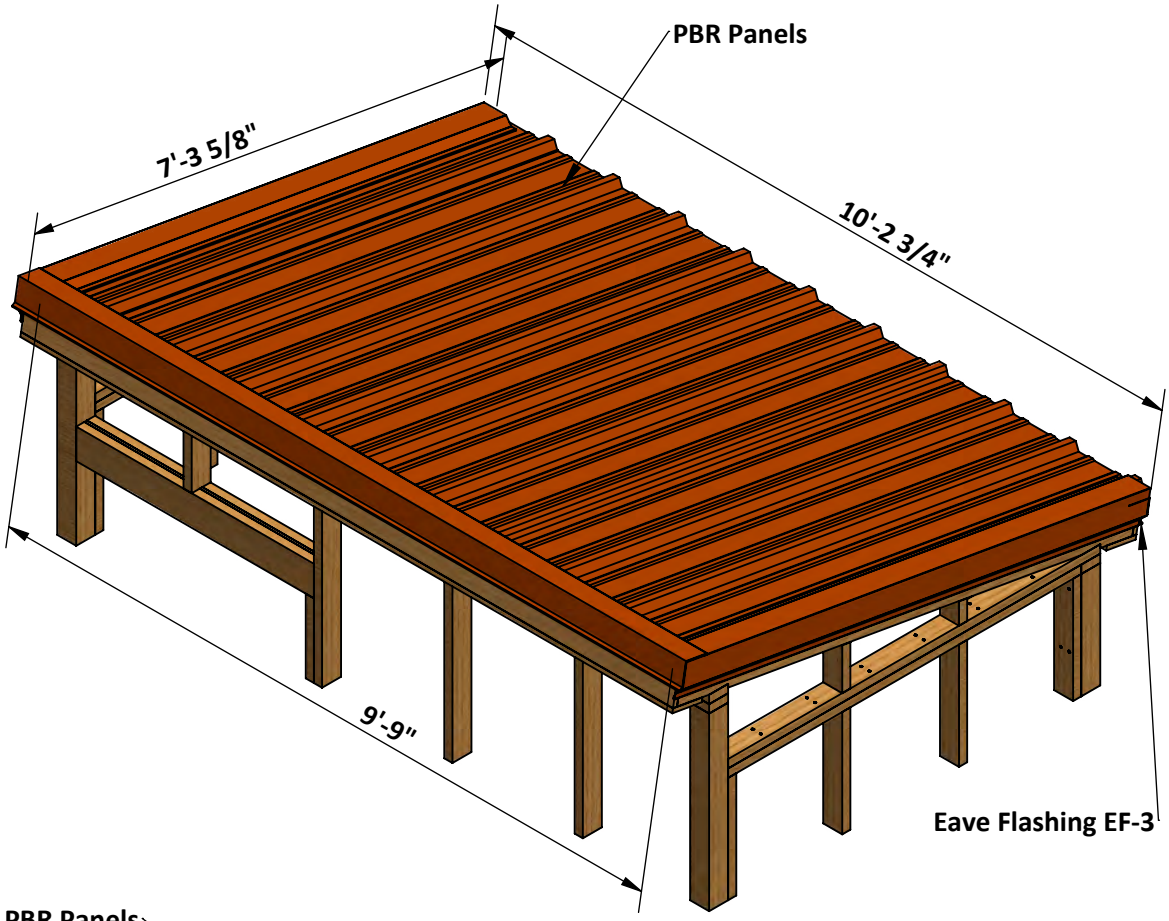

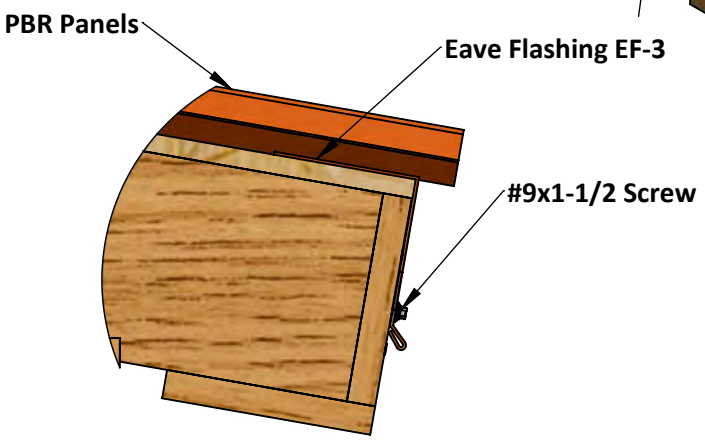

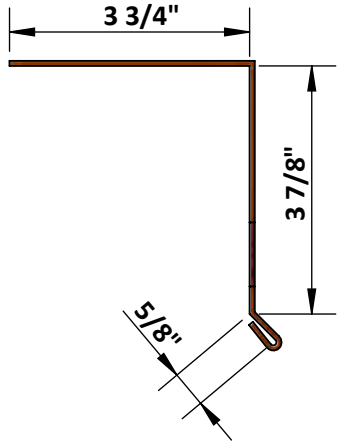

Node:1

STEP 6

Placement of Nesting Box and Roosting bars in the Coop

6.1 Place the nesting box and the roosting bars at the switable position in the chicken coop

STEP 7

Final touches

Now that your chicken run is all done, you can decorate it using your favorite paint, stain, or preservative and prepare for petting chickens.

.

Compare Free vs. Premium plan

	Free plan	Premium edition
Pages	7	14
Illustrations for Each Step	✓	✓
Print Ready	✓	✓
Step By Step Instructions	✓	✓
Full Materials and Cuttings List	✗	✓
Additional Illustrations	✗	✓
Additional Blueprints	✗	✓
Tools List	✗	✓
Fastening Elements List	✗	✓
Technical Support	✗	✓

TRY PREMIUM

For more great **HOW-TO** plans please visit: **https://easycoops.com/**

Copyright

The text and illustrations that appear here are the exclusive property of shedplans.org and are protected by federal copyright laws. The duplication, sale or distribution of any portion of these plans without prior written consent from the original designer will be subject to the appropriate penalties for copyright infringement. Sharing this plan on the web is only permited with an indicated original source: https://easycoops.com/